Asian Journal of
Science, Technology, Engineering, and Art

e-ISSN: 3025-4507
p-ISSN: 3025-5287
Index: Harvard, Boston, Sydney University, Dimensions, Lens, Scilit, Semantic, Google, etc

https://doi.org/10.58578/AJSTEA.v3i5.7028

Adaptive Speed Controller for Industrial Gas Turbine Based on Valve Positioner Reference Model

A. E. Jonathan, M. Olubiwe, S. O. Okozi, E. S. Mbonu
Federal University of Technology, Owerri, Nigeria
jonathanae@fuotuoke.edu.ng

Article Info:

Submitted:	Revised:	Accepted:	Published:
Jul 23, 2025	Aug 18, 2025	Aug 30, 2025	Sep 5, 2025

Abstract

Research on speed control has advanced considerably, with continued efforts to address challenges related to load–frequency variation in power systems and gas turbines. This paper proposes a novel speed control system for heavy-duty gas turbines (HDGT) using an adaptive-like Proportional–Integral–Derivative (PID) controller integrated with a valve positioner reference model. The dynamic model of HDGT load–frequency operation was developed, alongside control models for model reference adaptive control (MRAC) and conventional PID. A composite multi-loop control structure combining MRAC and PID was then designed. Simulation results demonstrate that the proposed MRAC–PID system achieved rise times of 1.6074 s at no load and 1.5958 s at full load torque, settling times of 4.9584 s and 5.6801 s, and overshoot values of 4.9475% and 6.0385%, respectively. Overall, the composite system outperformed standalone MRAC and PID controllers, offering more adaptive and robust speed regulation under varying load–frequency conditions in HDGT operation. The findings highlight the potential of MRAC–PID control strategies to enhance gas turbine performance and reliability in power systems.

AJSTEA Journal is licensed under a Creative Commons Attribution-NonCommercial-ShareAlike 4.0 International License

Keywords: Gas Turbine; PID Control; Model Reference Adaptive Control; Load–Frequency; Speed Regulation

INTRODUCTION

Electrical power generation and energy is the backbone of every nation to survive in this present generation (Mansoor, 2014). Electricity generation is the process of generating electrical power from other sources of primary energy. It is also impossible to discuss the growth potential of the Nigeria economy without recourse to the challenges in the power sector (KPMG Power Sector Watch, 2019).

There are many means and method of generating electricity in any nation base on their raw materials and means of their primary fuel. Currently electricity can be generated from different means including; renewable/solar cells, engine, hydro, steam, wind and gas turbine etc.

Gas turbines are of different applications like the aero-derivative gas turbines, for mechanical drive and for power generation. The most efficient thermal-power conversion machine is the heavy-duty Gas Turbine (HDGT) (Jiang, Ren, Li, & Tan, 2014) and it is installed for power generation worldwide (Bank Tavakoli, Vahidi, & Gawlik, 2009). Some heavy-duty gas turbines are of a single shaft while others are of double shaft. Gas turbines for power generation are environmentally safe, efficient and reliable.

Gas turbine is a high-tech machine used for electric power generation, to drive mechanical loads and for aerodynamics. Heavy Duty Gas Turbines (HDGTs) are capable of burning a variety of fuels, ranging from natural gas to heavy gas liquid residuals. Heavy duty gas turbines are large sized, industrial gas turbines which are generally used in power generation in big power plants. HDGTs usually slower in speed, narrower in operating speed range, heavier, larger, have higher air flow, slower in start-up and need more time and spare parts for maintenance (Almasi, 2012).

Instability in the load frequency dynamic of gas turbine can lead to unplanned emergency shutdowns due to load imbalance among the turbines, overvoltage, over speed, over-current, of turbines, high frequency, under- frequency of turbines. The negative effect of the system instability and shutdowns can render a lot of damages on the load gear box of turbines. For instance, frequent shutdown of HDGT can occur due to unusual

temperature rise in proportion to load increase (Jonathan, Olubiwe, Okozi, & Agubor, 2018). Thus, several speed control systems have been presented to facilitate the efficient operation of gas turbine. For instance, to address the problem of setpoint deviation and load frequency fluctuation that may adversely impact on the stability of grid-connected heavy-duty gas turbine power plants, a neuro-fuzzy control system was applied (Mohamed Iqbal, Joseph Xavier, & Kanakaraj, 2017). Instability and load fluctuation was tackled with the aid of different control strategies such as Zeigler-Nichols PID, Fuzzy Logic Controller (FLC), FLC-PID, and hybrid control model of PID/FLC/FLC-PID applied to gas turbine generator (Abbassen, Zaouia, Benamrouche, & Bousbaine, 2020). The operation of speed droop governor at gas turbine cogeneration unit has been optimized (Maharmi, Cholid, Syafii, & Arya, 2024). Nonlinear design technique based PID controller was used to enhance the load-frequency performance of gas turbine (Jonathan, 2024). The dynamic performance of gas turbine was improved with minimum overshoot and settling time using interval fuzzy type-2 PID controller (Oglah & Mohammed, 2018). In their study, Shlyk, Vlasov, Kuzyakor, and Revyakin (2019) carried out modeling the synchronization process of generators on gas turbines power plant. In attempt to improve the speed response of HDGT, PI and FLC control systems were implemented with FLC observed to offer better system response (Penchalaiah & Reddy, 2016). A nonlinear design based PID controller was used to improve the response time of load frequency control of a gas turbine from 20 s to 10.5 s (Ugoh, Olubiwe, & Inaibo, 2018).

The review has shown that classical control based on PID model and intelligent FLC algorithm and their combination (i.e. FLC-PID) are still common control approach in use for speed control of gas turbine. While these strategies have offered good transient response for load frequency operation of gas turbine, they still face some limitations in control system including the combination of both algorithms. With classical PID prone to parameter variation and high overshoot effect, FLC systems usually suffer the effect of steady-state error (Eze & Ezenugu, 2024; Mahmood, Al-bayati, & Szabolcsi, 2024). Therefore, FLC model is usually augmented with some reasonably gain value or compensator to eliminate the effect of steady-state error as implemented in Eze, Ekengwu, Asiegbu, & Ozue, (2021); Agwah & Eze (2022). In this work a new concept of speed control is proposed based on adaptive controller that uses valve positioner dynamic as its reference model for HDGT serving as co-generation unit of the same capacity.

METHODS

Multi-loop control based on model reference adaptive control (MRAC) augmented with PID is proposed for speed control system of gas turbine. The control objective is to improve the load frequency (or speed) dynamic response of gas turbine in in terms of the time domain performance parameters of the system which includes rise time, peak time, settling time, maximum overshoot, and steady-state error. The structure of the proposed system is shown in Figure 1.

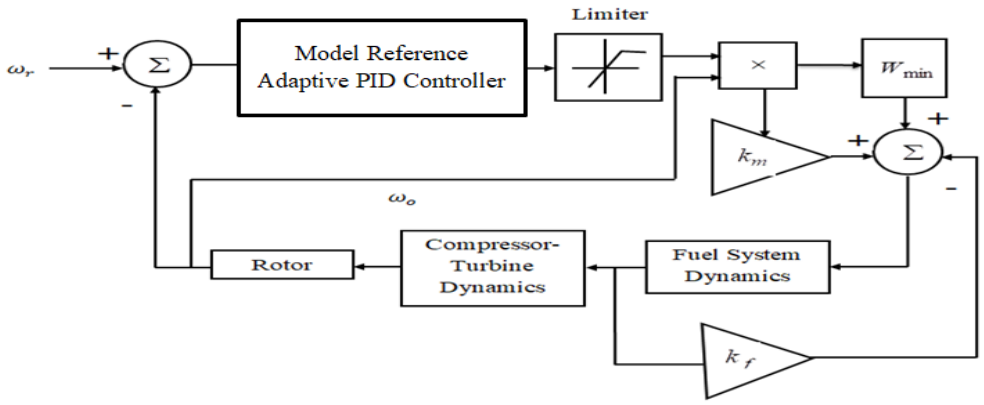

Figure 1: Configuration of the proposed gas turbine speed control system

Dynamic Model of Gas Turbine

The dynamics of the parts of the gas turbine that are essentials in analyzing the transient characteristics of a load-frequency control are considered as follows.

Fuel system dynamics: this comprises the valve positioner and the fuel system actuator given in Equations (1) and (2) and the block diagram is shown in Figure 2. In the figure, VCE is the output of the least value gate (LVG) that coordinates the least amount of fuel required for a given operating point including serving as input to the fuel system. The per unit turbine speed, minimum amount of fuel flow, fuel system feedback are represented by N, W_{min}, and k_f. The gain k_m is equal to $1 - W_{min}$.

$$G_{VP}(s) = \frac{a}{bs+c} \quad (1)$$

$$G_{FS}(s) = \frac{a}{T_{fc}s+c} \quad (2)$$

where a, b, and c are the constants of the valve positioner, and T_{fc} is the time constant of the fuel system actuator in seconds.

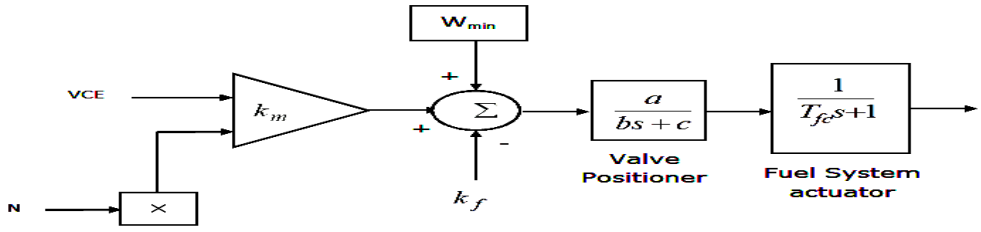

Figure 2: Fuel system dynamic model

Compressor-turbine dynamics: this covers the dynamics of the load-frequency control loop of gas turbine in terms of the burning of fuel in the combustor in Equation (3), hot computation gas expansion transfer function in Equation (4), and the mechanical torque produced that drives the electric generator in Equation (5). The block diagram of the compression-turbine dynamics is shown in Figure 3.

$$G_{BF} = e^{-sT_{CR}} \quad (3)$$

$$G_{GE}(s) = \frac{1}{T_{CD}s+1} \quad (4)$$

$$T_m = A + B\dot{m}_f + C(1 - N) \quad (5)$$

where A and are constant of the output torque whose values are defined in Table 1. The constant C varies between 0.5 and 0.67 for HDGT (Bank Tavakoli *et al.*, 2009). The value of C is taken as 0.5 in this work.

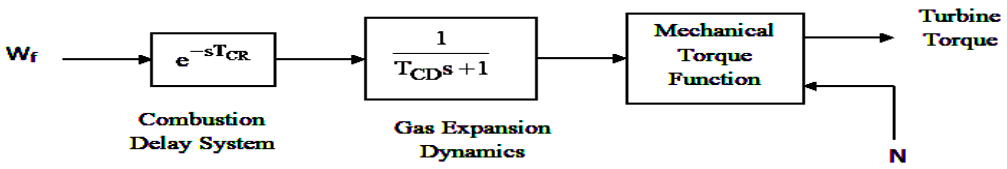

Figure 3: Compressor-turbine dynamic model

Table 1. System parameters

Parameters	Symbol	unit	values
Governor speed gain=1/droop	W	pu	25
Governor lead time constant	X	sec.	0.2
Governor lag time constant	Y	sec.	0.05
Control mode (1=droop, 0= isochronous)	Z	-	1
Upper limit of fuel demand	F_{max}	pu	1.5
Lower limit of fuel demand	F_{min}	pu	0
Valve positioned	a	-	1

Parameters	Symbol	unit	values
Valve positioned	b	-	-0.1
Valve positioned	c	-	1
Minimum fuel flow	W_{min}	-	0.23
Fuel control time constant	T_{FC}	sec.	0.4
Fuel system feedback	K_{FB}	-	0
Combustion reaction time delay constant	T_{CR}	sec.	0.01
Compressor discharge volume time constant	E_{CD}	sec.	0.2
Turbine inertia constant	T_t	sec.	15.64
Gas turbine torque bock parameter	A	-	-0.4978
Gas turbine torque bock parameter	B	-	1.5002
Gas turbine torque bock parameter	C		0.5

Controller Design

Model Reference Adaptive Control (MRAC) Design

Given the valve positioner dynamic as the reference $G_m(s)$, let the difference between the actual output ω_o of the process and output of the reference model v_p be expressed as in Equation (6) and the cost function defined in terms of the adjustment parameter θ_c define as in Equation (7).

$$e = \omega_o - v_p \quad (6)$$

$$J(\theta_c) = \frac{1}{2}e^2 \quad (7)$$

The cost function $J(\theta_c)$ is minimized in such that the rate of change in θ_c is sustained in the negative gradient of J defined by Eze, Njoku, Nwokonkwo, Onukwugha, Odii *et al.* (2024):

$$\frac{d\theta_c}{dt} = -\Gamma\frac{\partial J}{\partial \theta_c} = -\Gamma e\frac{\partial e}{\partial \theta_c} \quad (8)$$

where $\partial e/\partial\theta_c$ is the represents the sensitivity derivative and Γ is adaptation gain.

Let the transfer function of the gas turbine system be equal to $KG_p(s)$ where K is a parameter whose value is unknown. Also, let the reference model be approximated to a first order transfer function considering the valve positioner Equation (1). The choice of choosing the valve positioner as the reference model is that it improves the accuracy and

response speed of the control valve and ensures the fluid control system stability especially in industrial applications involving liquid or gas. Also, its accuracy directly affects the dynamic response characteristics of the entire system (Weizidom, 2024). Thus, the reference model is defined by:

$$G_m(s) = K_o G_p(s) \tag{9}$$

where K_o is a parameter of known value. Therefore, Equation (6) can be expressed by:

$$E(s) = KG_p(s)U(s) - K_o G_p(s)U_c(s) \tag{10}$$

where $KG_p(s)U(s) = \omega_o(s)$ and $K_o G_p(s)U_c(s) = V_p(s)$, and U_c is taken as the control input to the reference model.

Assuming the control variable to plant is defined Equation (11), and substituting it into Equation (10) and taking the partial differentiation gives Equation (12).

$$U(s) = \theta_c U_c(s) \tag{11}$$

$$\frac{\partial E(s)}{\partial \theta_c} = KG_p(s)U_c(s) = \frac{K}{K_o}V_p \tag{12}$$

The combination of Equations (8) and (12) produces Equation (13). This equation is the law or adjustment mechanism for the rate of adjusting or changing the parameter θ_c.

$$\frac{d\theta_c}{dt} = -\Gamma e \frac{K}{K_o}V_p = -\Gamma' e V_p, \quad (i.e. \Gamma' = \Gamma\frac{K}{K_o}) \tag{13}$$

Proportional Integration and Derivative (PID) Controller

In industrial control systems, PID controllers are largely used due to simple design structure and ease of implementation (Eze, Jonathan, Agwah, & Okoronkwo, 2020). A simple closed loop structure of PID control system as three-term controller is shown in Figure 4.

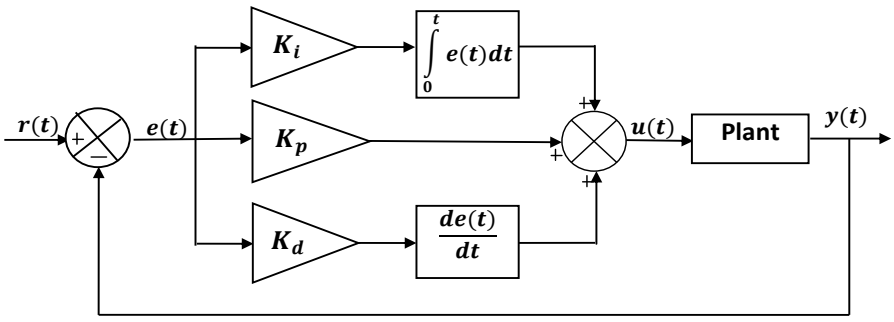

Figure 4: PID control system (Okoye, Eze, & Oyiogu, 2021)

From Figure 4, a mathematical expression of the PID controller can be determined. Given the reference input $r(t)$, error $e(t)$, and the control variable $u(t)$, the PID control algorithm can be established in terms of the proportional, integral, and derivative gains $K_{p,}$ K_i, and K_d as follows. Equations (14) to (16) are the mathematical expressions for error, control variable, and the PID controller.

$$e(t) = r(t) - y(t) \quad (14)$$

$$u(t) = K_p e(t) + K_i \int_0^t e(t)dt + K_d \frac{de(t)}{dt} \quad (15a)$$

$$U(s) = K_p E(s) + K_i \frac{1}{s} E(s) + K_d s E(s) \quad (15b)$$

$$C(s) = K_p + K_i \frac{1}{s} + K_d s \quad (16)$$

The gains of the PID were determined by nonlinear tuning in MATLAB/Simulink and the designed PID controller is given in Equation (17) and the configuration of the adaptive like PID control system for the gas turbine speed is shown in Figure 5.

$$C(s) = 10 + \frac{1.26}{s} \times 10^{-5} + 1.85s \quad (17)$$

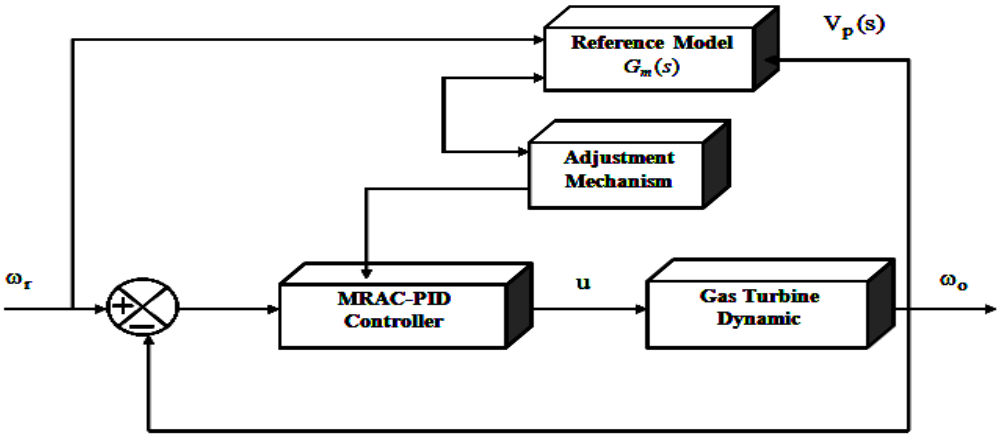

Figure 5: Adaptive-like PID based gas turbine speed control system

RESULTS

The effect of MRAC application to the LFC loop of gas turbines is presented in this section. Simulation was carried out considering the MRAC model. By tuning from low value to high value, the adaptation gains (i.e. Γ = 0.5, 0.8, 1, 2, 3, 4. 5, or 6) were selected.

Figure 6 and Table 2 show the speed response curves and numerical performance of the designed MRAC when implemented in one of the gas turbines for the adaptation gains.

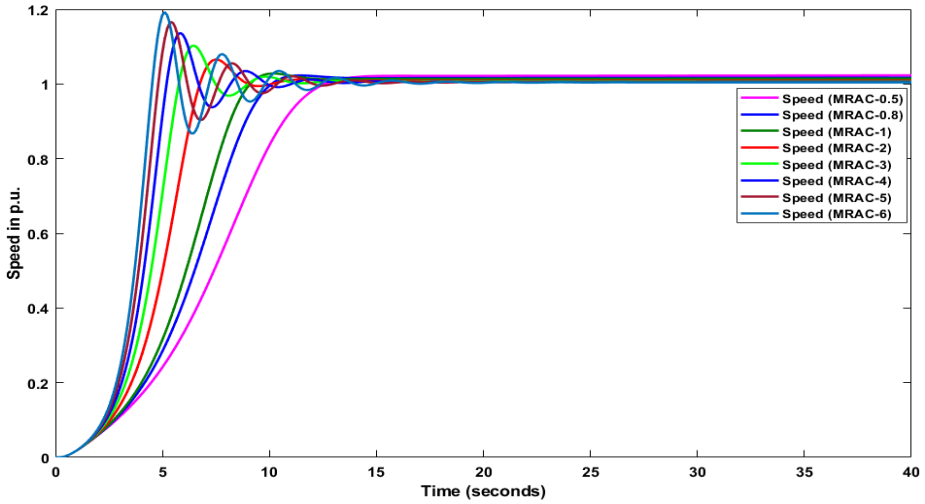

Figure 6: Speed response of MRAC controller

Table 2. Numerical analysis of MRAC step response curves for different adaptation gains

Γ	Rise time (s)	Settling time (s)	Peak time (s)	Overshoot (%)	Peak value
0.5	8.0481	12.7133	14.4821	0.0000	1.0232
0.8	6.2332	10.0302	11.4811	0.5727	1.0229
1.0	5.5142	9.0196	10.1825	1.3214	1.0281
2.0	3.7769	8.3406	7.5679	5.5779	1.0655
3.0	3.0416	8.7147	6.4461	9.5234	1.1028
4.0	2.6195	9.2827	5.8518	12.9896	1.1362
5.0	2.3377	10.0464	5.4089	16.0393	1.1659
6.0	2.1335	11.8179	5.1074	18.7359	1.1923

With Γ selected based on tuning of values from low to high range, it can be seen looking at Table 2 that values of rise time and peak time reduce as the adaptation as the adaptation gain value increases. The settling revealed gradual decline as the adaptation gain value reduces from 0.5 to 2, but rises again as the adaptation gain increases from 3 to 6. The peak overshoot and the peak value increases as the adaptation increases. Thus, it can be see looking at the overshoot performance that system exhibits increase in frequency of oscillation as the adaptation gain increases. This resulted in higher overshoot as revealed graphically in Figure 6. With the rise in system frequency of oscillation with increasing adaptation gain, the simulation results indicated that the output of the gas turbine LFC

loop will get saturated after certain value of the adaptation rate. Furthermore, a critical observation is that a reflex point in performance of the controller occurs at adaptation gain 2, after which the settling time began to increase. This can be considered as the point of optimality in performance. Therefore, from this observation, it suffices to take adaptation gain 2 as appropriate value for implementation of the designed MRAC gas turbine control systems. Using this gain to evaluate the behaviour of the three gas turbine loops, the following response curves are obtained for the speed as shown in Figure 7.

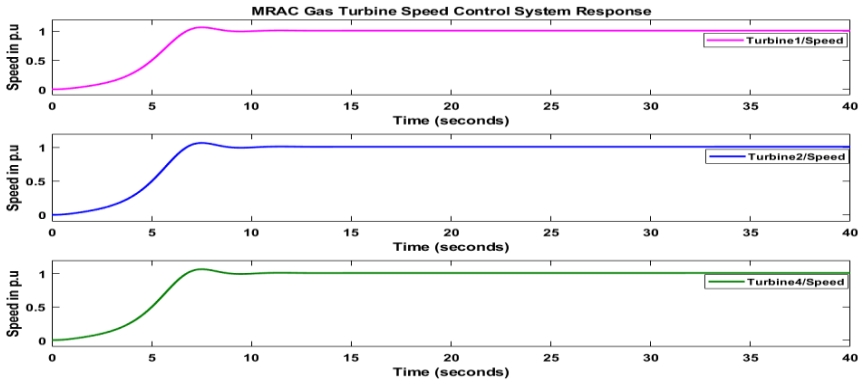

Figure 7: Speed response of MRAC based LFC for gas turbines

The simulation results conducted with PID control gas turbine is presented in this section. The analysis was performed for three gas turbines with the same PID controller and the LFC (or speed) response (in Figure 8).

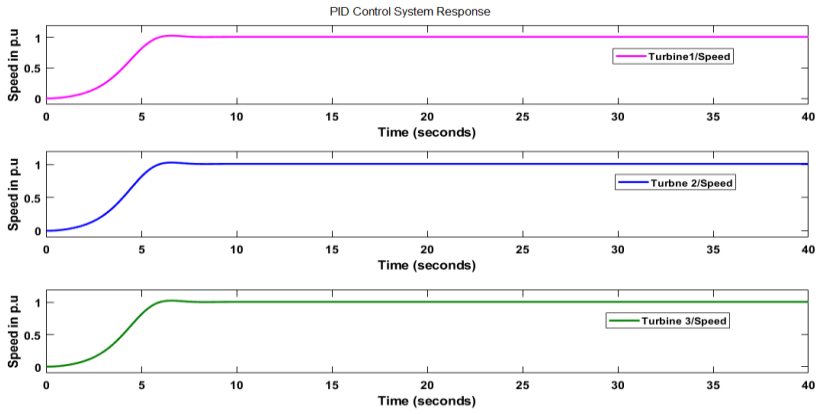

Figure 8: Speed response of PID controller

The response of the designed composite control system based on optimizing MRAC with PID algorithm is presented as shown in Figure 9. The result is a graphical plot of response of the MRAC-PID control system when a setpoint input is applied to the system at t = 0 given a time interval of 0 to 40 s. The graph shows the curves of the speed

control system with adaptation gain of 2. It should be noted that the designed MRAC-PID was implemented with adaptation gain of 2 because the MRAC adjustment mechanism was observed to offer the finest dynamic response performance in this condition.

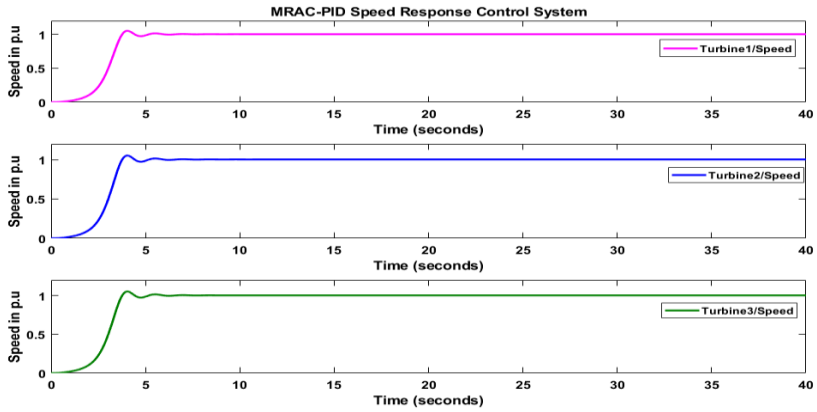

Figure 9: Speed response of MRAC-PID LFC for gas turbines

The various control systems developed in this work for the load frequency control (LFC) of the gas turbines, which were evaluated in terms of speed responses are compared in this section. Figure 10 shows the speed response comparison of all the various control systems at no load. Table 3 presents the list of their performance parameters. It should be noted that only one of the turbines was used for the comparison since they are of the same capacity and operating under the same parameters and conditions.

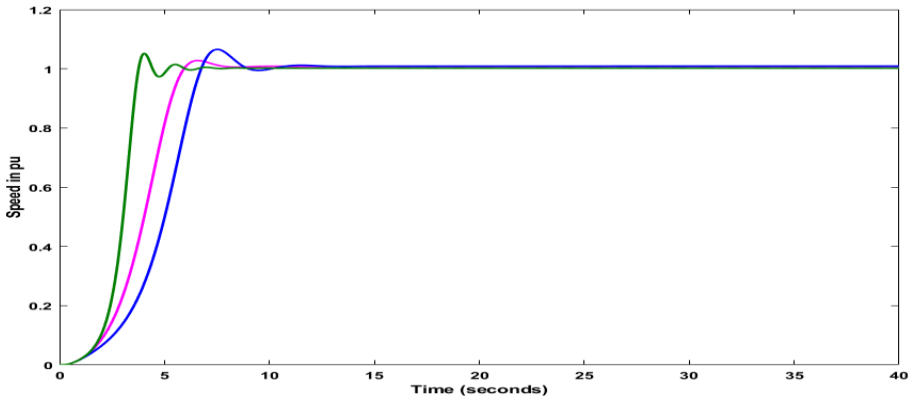

Figure 10: Speed responses of different controllers for LFC system

Table 3. Performance comparison at no load

Control system	Rise time (s)	Settling time (s)	Peak time (s)	Overshoot (%)	Peak value (pu)
PID	3.2164	5.8189	6.5580	1.9484	1.0277
MRAC	3.7769	8.3406	7.5679	5.5779	1.0655
MRAC-PID	1.6074	4.9584	4.0187	4.9475	1.0518

In order to further validate the effectiveness of the various controllers, comparison was made in terms of varying load torque effect on the LFC (speed) dynamic response of the gas turbines. It should be noted that the controllers were implemented in only one of the gas turbines because of their sameness. Figure 11 shows the effect of load torquesof magnitude 1pu on the speed dynamic response of the gas turbines and the resulting performance parameters are listed in Table 4. This value was chosen to represent 100% loading,. The load was introduced at time t = 10 s.

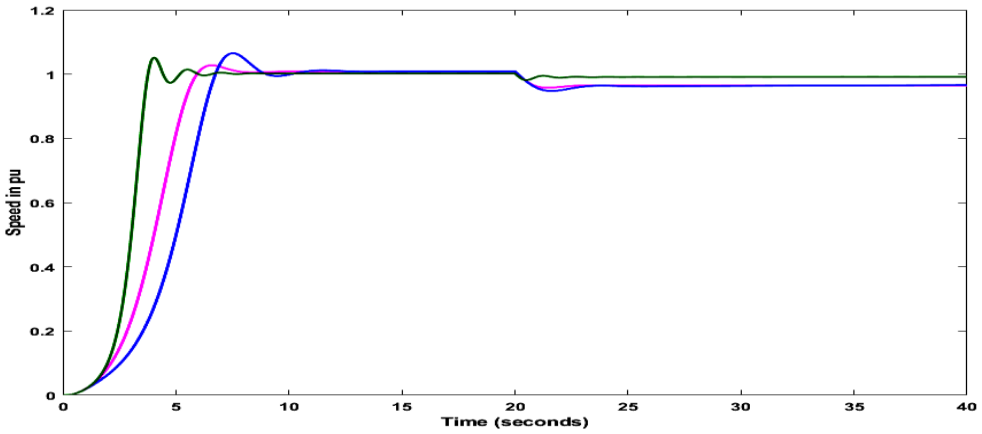

Figure 11: Speed response of different controllers at 100% loading

Table 4. Speed dynamic response parameter at 100% loading

Control system	Rise time (s)	Settling time (s)	Peak time (s)	Overshoot (%)	Peak value (pu)
PID	3.0992	10.3975	6.5636	6.5693	1.0279
MRAC	3.7000	10.2107	7.4846	10.0126	1.0656
MRAC-PID	1.5958	5.6801	4.0145	6.0385	1.0517

DISCUSSION

As shown in Figure 7, the speed of the gas turbines was settled at the referenced valued using MRAC with adaptation gain 2. From Table 2, it can be seen that it took the MRAC controlled gas turbines 3.7769 s to respond to the applied unit step forcing input to the LFC loop and 8.3406 s to settle system to the referenced speed. Besides, the table revealed that the MRAC caused the system to overshoot the referenced value by 5.5779% and causing a peak value of 1.0655 at time t = 7.5679 s.

In Figure 8, the speed response of the gas turbine was settled at the referenced valued using PID controller. Looking at Table 3, it can be seen that it took the PID controlled gas turbines 3.2164 s to respond to the applied unit step forcing input to the LFC loop and 5.8189 s to converge or settle the system to the referenced speed. Furthermore, the table revealed that PID controller caused the system to overshoot the referenced value by 1.9484% and the peak was 1.0277 at time t = 6.5580 s.

The designed MRAC-PID control system used multi-loop strategy to enhance the performance of the LFC loop of the gas turbine. In the system, the outer loop of the controller implements an adaptive (or adjustment) mechanism that measures and update the adjustable parameter according to the deviation or error between the gas turbine speed and the response of fuel valve positioner (reference model). The updated or adjustable signal, which was the control signal of the MRAC, was fed into the PID controller in the inner loop to adjust its control variable. In Figure 9, it can be deduced that the use of MRAC-PID significantly enhanced the performance of PID and MRAC each in terms of rise time, settling time, and peak time, which are 1.6074 s, 4.9584 s, and 4.0187 s (see Table 3 for the numerical analysis). PID outperformed the designed MRAC-PID in terms of overshoot and peak value. The MRAC-PID outperformed the classical MRAC in all aspect.

As shown in Figure 10 and Table 3, the dynamic responses of the various speed control systems in LFC loop of gas turbine indicated that the MRAC-PID controller offered the best performance in terms of response time, settling time, and peak time.

It can be seen from Figure 11 and Tables 4 that there are basically three performance parameters that showed outright variation during loading conditions. These are rise time, settling time, and overshoot. On the other hand, the peak value and the peak time remained almost the same. The introduction of load torque resulted in reduced rise time, but increased settling time and overshoot. With the introduction of load torque, the

performance of the classical PID controller and the MRAC drastically deteriorated, but the MRAC-PID show some remarkable robustness. Therefore, in the presence of loading, the MRAC-PID will offer robust and adaptive control compared to PID and MRAC.

CONCLUSION

In a power grid system, load frequency control (LFC) contributes essentially to the performance of the system. It provides better conditions for power exchange and supply in trading electricity. This paper has presented adaptive speed control for industrial gas turbine based on valve positioner reference model. The interest is to design a controller that will improve the transient performance of an industrial gas turbine. Since the dynamic behaviour of the power systems and also their effects in industrial loads depend on disturbances and in particular on changes in the operating point**,** the simulated results have shown that the proposed MRAC-PID based on valve positioner reference model is a good choice. The analysis revealed that the proposed controller provides adaptive and robust control in the presence of load torque (or disturbance). Future research should take advantage of this technique and introduce an intelligent algorithm to further enhance the control process.

REFERENCES

Abbassen, L., Zaouia, M., Benamrouche, N., & Bousbaine, A. (2020). Control strategies of a gas turbine generator: a comparative study. *Indonesian Journal of Electrical Engineering and Informatics, 8*(4), 626-636. https://doi.org/10.111591/ijeei.v8i4.2100

Agwah, B. C., & Eze, P. C. (2022). An intelligent controller augmented with variable zero lag compensation for antilock braking system. *International Journal of Mechanical and Mechatronics Engineering*, *16*(11), 303-310.

Almasi, A. (2012, April 25). *Gas turbine selection: Heavy frame or aeroderivative*. Turbomachinery. https://www.turbomachinerymag.com/view/gas-turbine-selection-heavy-frame-or-aeroderivative

Bank Tavakoli, M. R., Vahidi, B., & Gawlik W. (2009). An educational guide to extract the parameters of heavy duty gas turbines model in dynamic studies based on operational data. IEEE Transaction on Power System, *24*(3), 1366-1374. http://dx.doi.org/10.1109/TPWRS.2009.2021231

Eze, P. C., Ekengwu, B. O., Asiegbu, N. C., & Ozue, T. I. (2021). Adjustable gain enhanced fuzzy logic controller for optimal wheel slip ratio tracking in hard braking control system. *Advances in Electrical and Electronic Engineering, 19*(3), 231-242. http://dx.doi.org/10.15598/aeee.v19i3.4124

Eze, P. C., & Ezenugu, I. A. (2024). Microsatellite yaw-axis attitude control system using model reference adaptive control based PID controller. *International Journal of Electrical and Computer Engineering Research, 4*(2), 8–16. https://doi.org/10.53375/ijecer.2024.389

Eze, P. C., Jonathan, A. E., Agwah, B. C. and Okoronkwo, E. A. (2020). Improving the performance response of mobile satellite dish antenna network within Nigeria. *Journal of Electrical, Electronics, Control and Computer Science, 6*(21), 25-30.

Eze, P. C., Njoku, D. O., Nwokonkwo, O. C., Onukwugha, C. G., Odii, J. N., Jibiri, J. E. (2024). Wheel slip equilibrium point model reference adaptive control based PID controller for antilock braking system: a new approach. *International Journal of Automotive and Mechanical Engineering, 21*(3), 11581 – 11595 https://doi.org/10.15282/ijame.21.3.2024.10.0893

Jiang, H. & Ren, J. & Li, X. & Tan, Q. (2014). Status and development trend of the heavy duty gas turbine. *Zhongguo Dianji Gongcheng Xuebao/Proceedings of the Chinese Society of Electrical Engineering. 34*. 5096-5102. http://dx.doi.org/10.13334/j.0258-8013.pcsee.2014.29.011

Jonathan, A. E. (2024). Enhancing load-frequency control system of gas turbine using non-linear design technique based PID controller. *International Journal of Engineering Research and Development, 20*(6), 73-78.

Jonathan, A. E., Olubiwe, M., Okozi, S. O., & Agubor, C. K. (2018). Exhaust temperature control of heavy-duty gas turbine due to incremental load demand. *International Journal of Engineering Research & Technology, 7*(7), 420-426.

KPMG, (2019). *Nigeria's electricity supply industry highlights.* Power Sector Watch, Edition 2019-Q1. https://assets.kpmg.com/content/dam/kpmg/ng/pdf/audit/Nigeria-Electricity-Supply.pdf

Maharmi, B., Cholid, I., Syafii, & Arya, E. H. (2024). Optimization of speed droop governor operation at gas turbine cogeneration unit. *Indonesian Journal of Electrical Engineering and Computer Science, 33*(1), 20-30. https://doi.org/10.111591/ijeecs.v33.i1.pp20-30

Mahmood, A., Al-bayati, K. Y. A., & Szabolcsi, R. (2024). Optimizing antenna azimuth position control using fuzzy PD, fuzzy PD-I, and fuzzy PD-plus-I controllers. *Nanotechnology Perceptions 20* (3), 18–32. https://doi.org/10.62441/nano-ntp.v20i3.2

Mansoor-ul-Hassan. (2014). Power generation methods, techniques and economic strategy. *International Technical Science Journal,* 1(1), 43-61. https://elpjournal.eu/wp-content/uploads/2016/03/itsj-spec-1-1-5.pdf

Mohamed Iqbal, M. M., Joseph Xavier, R., & Kanakaraj, J. (2017). A neuro-fuzzy controller for grid-connected heavy-duty gas turbine power plants. *Turkish Journal of Electrical Engineering and Computer Sciences, 25,* 2375-2387. https://doi.org/10.111591/elk-1551-242

Oglah, A. A., & Mohammed, A. J. (2018). Design of an interval fuzzy type-2- PID controller for a gas turbine power plant. *American Scientific Research Journal for Engineering, Technology, and Sciences, 44*(1), 155-169. https://asrjetsjournal.org/index.php/American_Scientific_Journal/article/view/4171/1488

Okoye, U. P., Eze, P. C., & Oyiogu, D. C. (2021). Enhancing the performance of AVR system with prefilter aided PID controller. *Access International Journal of Research & Development, 1*(1), 19-32.

Penchalaiah, T. & Reddy, M. R. S. (2016). Governor controllers of heavy-duty gas turbine performance comparison using PI-controller and fuzzy logic controller. *International Research Journal of Engineering, and Technology, 3*(10), 1051-1058. https://www.irjet.net/archives/V3/i10/IRJET-V3I10199.pdf

Shlyk, Y. K., Vlasova, E .P., Kuzyakor, O. N., & Revyakin, E. E. (2019).Modeling the synchronization process of generators on gas turbine power plant. *IOP Conf. Series: Materials Science and Engineering, 643*(1), 012012. http://dx.doi.org/10.1088/1757-899X/643/1/012012

Ugoh, . C. A., Olubiwe, M., & Inaibo, D. S. (2018). Improving the response time of load – frequency control of gasturbine in a Nigerian refinery. *International Journal of Engineering Research & Technology, 7*(1), 400-405.

Weizidom (2024, Septemer 27). Overview of valve positioners and analysis of common faults. Weizidom. https://www.wsdvalves.com/overview-of-valve-positioners-and-analysis-of-common-faults/#:~:text=The%20key%20role%20of%20valve,see%20if%20the%20output%20changes.